FRAG

par lyon beton©

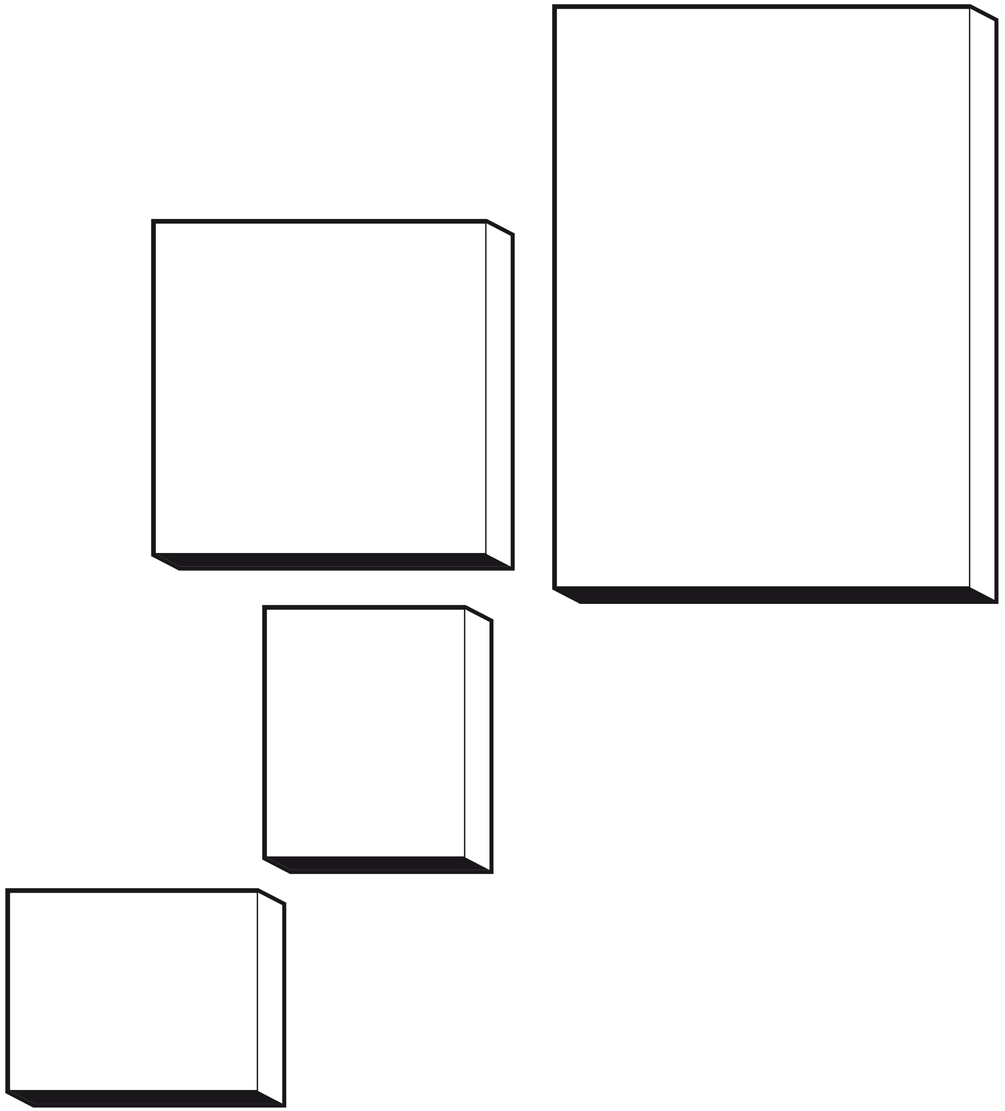

share some pics of your interior #lyonbeton

general comments

Read the instruction carefully before assembly.
Identify the different parts of the product. Group and check the hardware fittings. Get the necessary and keep the area clear before you begin assembly.
The assembly should be carried out by a qualified person because wrong assembly may lead to that the furniture topples or falls resulting in personal injury or damage.
Proceed to assemble. Never force the fittings.
Re-tighten the screws after some time of usage.
Keep the assembly instructions for future reference. They could facilitate communication with your store or dealer, in the event of any query.

distinctive features

The article that you have just acquired is hand-crafted.
It is made from lightened fibrous concrete (less than 2 tons per m3) reinforced with a steel frame structure. It is composed of natural materials (cement, sand; water, steel ad fibres) and is hand made.
The pores, microcracks and possible variation in colour are inherent characteristics of the material used and evidence of handicraft, which give this furniture its unique appearance and charm. For these reasons, this article cannot be returned or exchanged.

maintenance and care

Do not leave spills unattended.
Immediately clean coloured stains (such as red wine, oil, tea and coffee) with a wet sponge and soap.
Never use abrasive product, strong acid detergents, bleaching agents, metal brushes or high-pressure cleaners. Preferably use a soft clean dry cloth.
For good protection, apply wax or stone preserve products regularly.

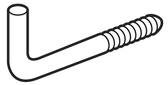

A - x2

B - x2

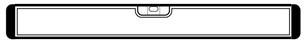

frag_2019-01

1

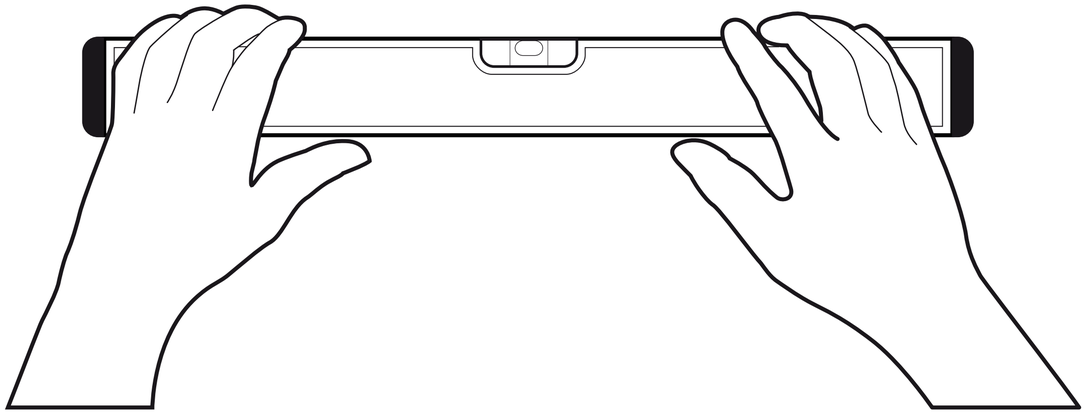

2

english
. be careful to be perfectly level
. trace your holes markers
. make 1 hole per hook
. be sure to keep a gap smaller than the length of the rail on the back of the plate

français
. attention à être parfaitement à niveau
. tracer vos repères de perçages
. faites 1 trou par crochet
. assurez-vous de garder un écartement inférieur à la longueur du rail situé au dos de la plaque

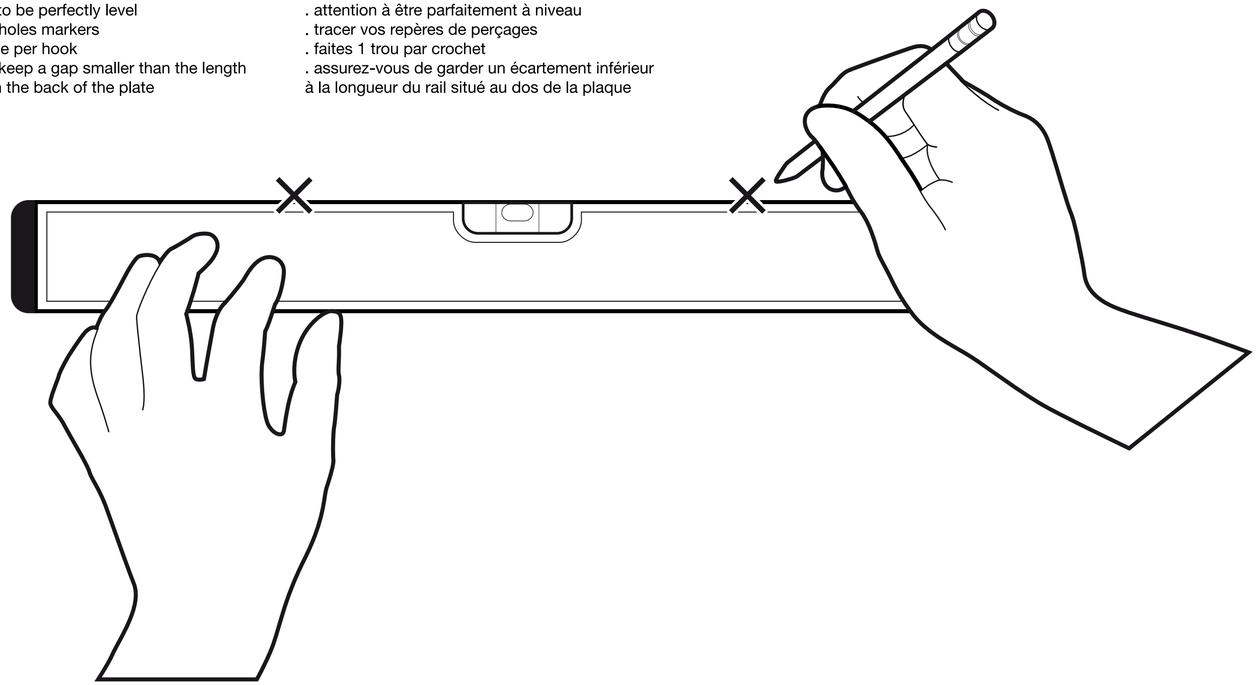

3

english:
drill a slightly downhill hole

français:
percer un trou en pente légèrement descendante

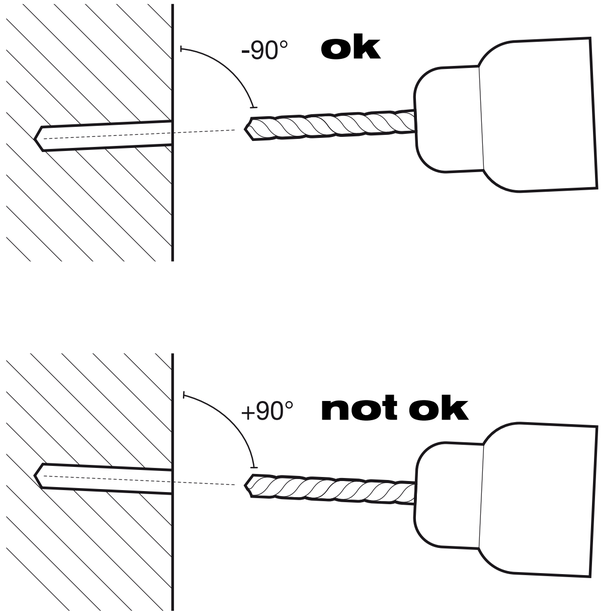

4

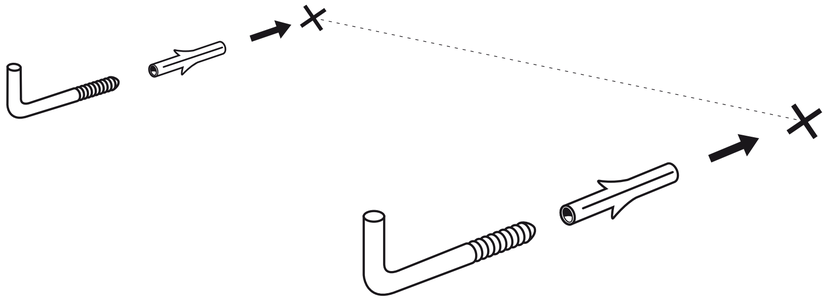
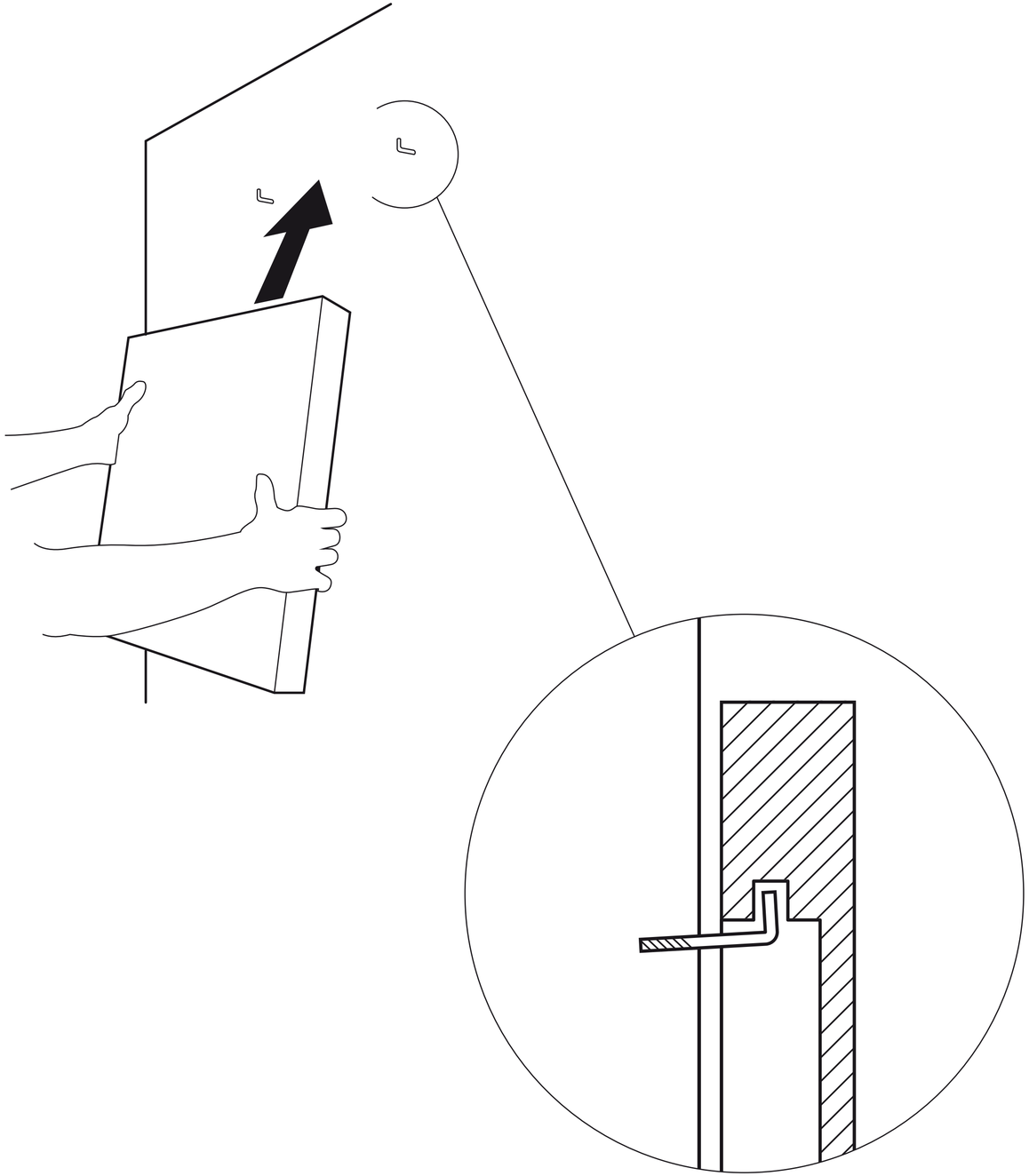
5